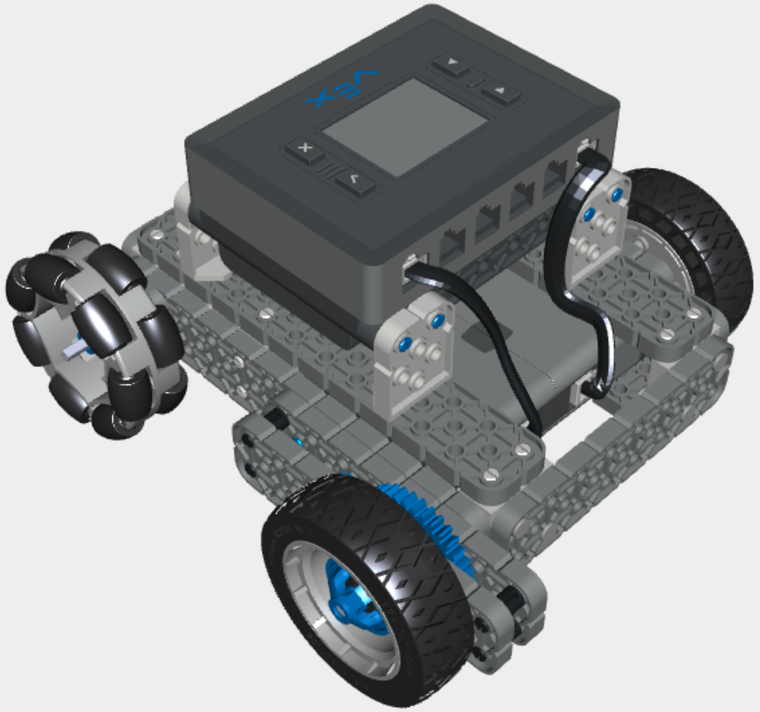
VEX

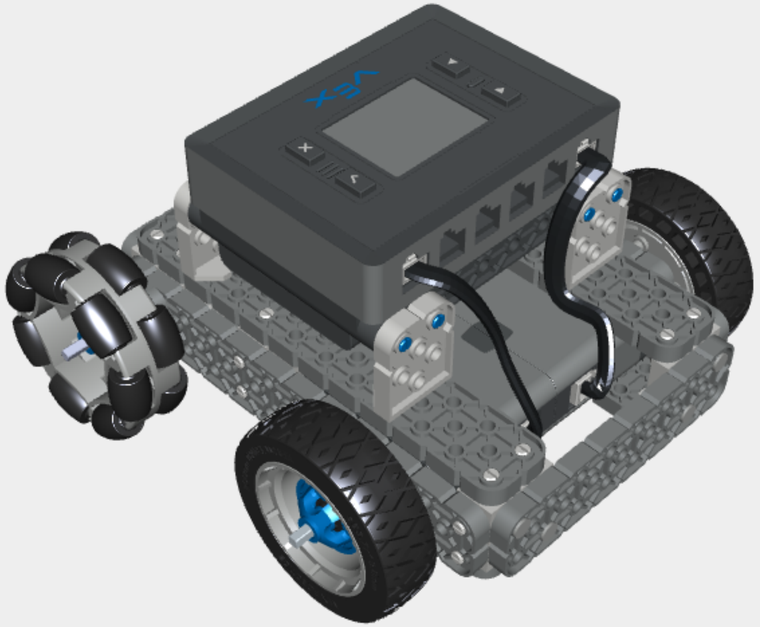
VEX

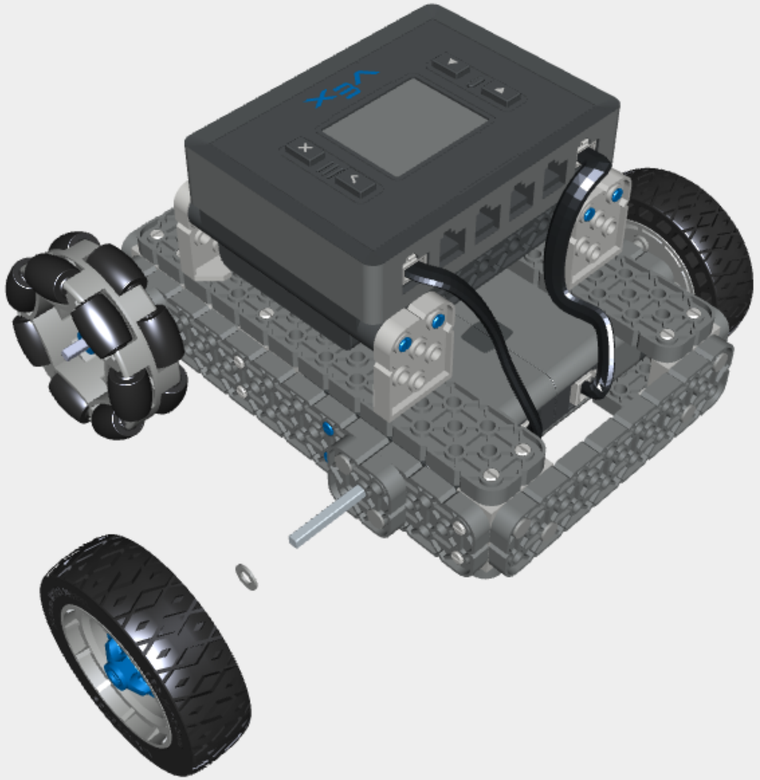
VEX

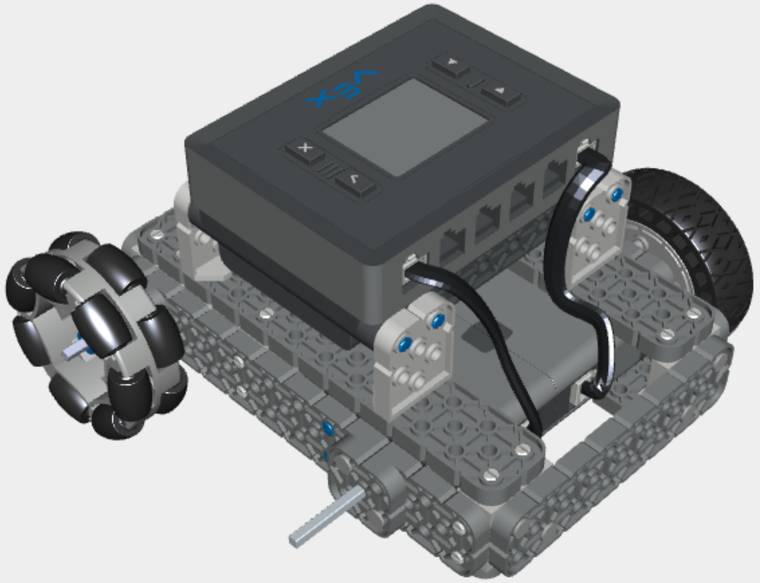

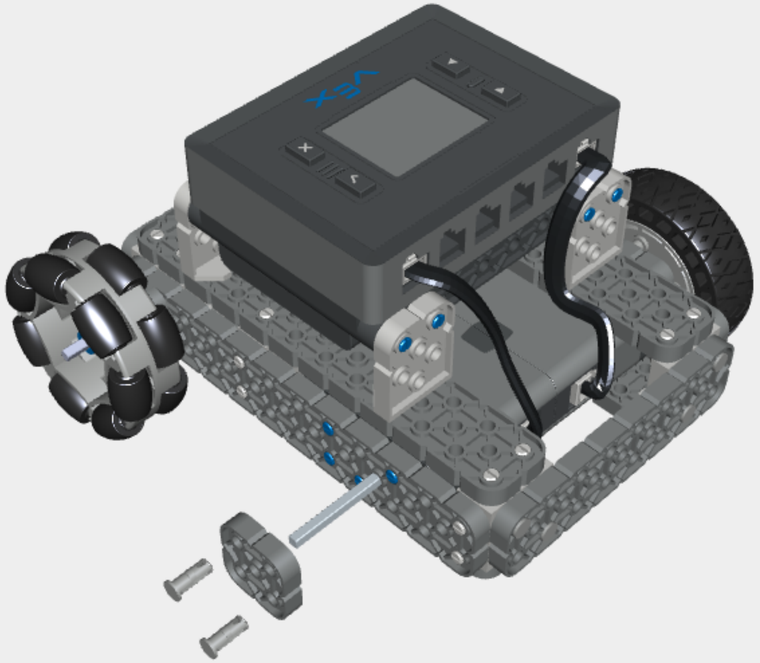

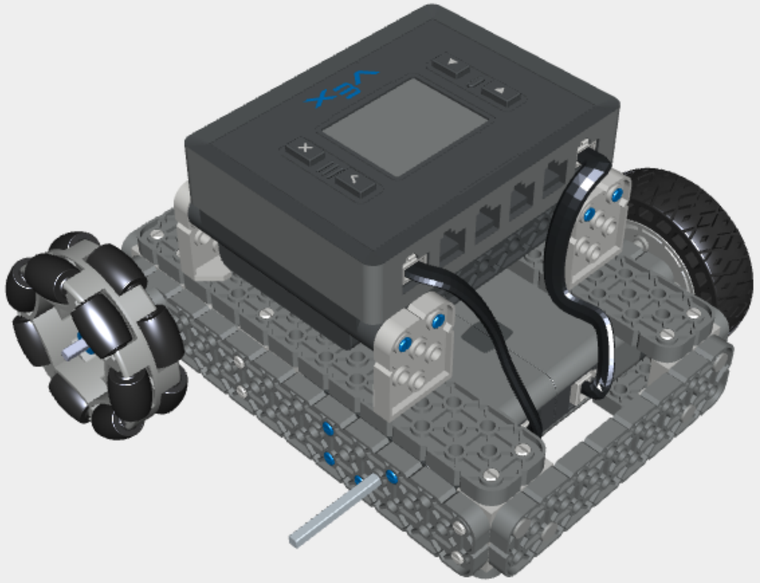

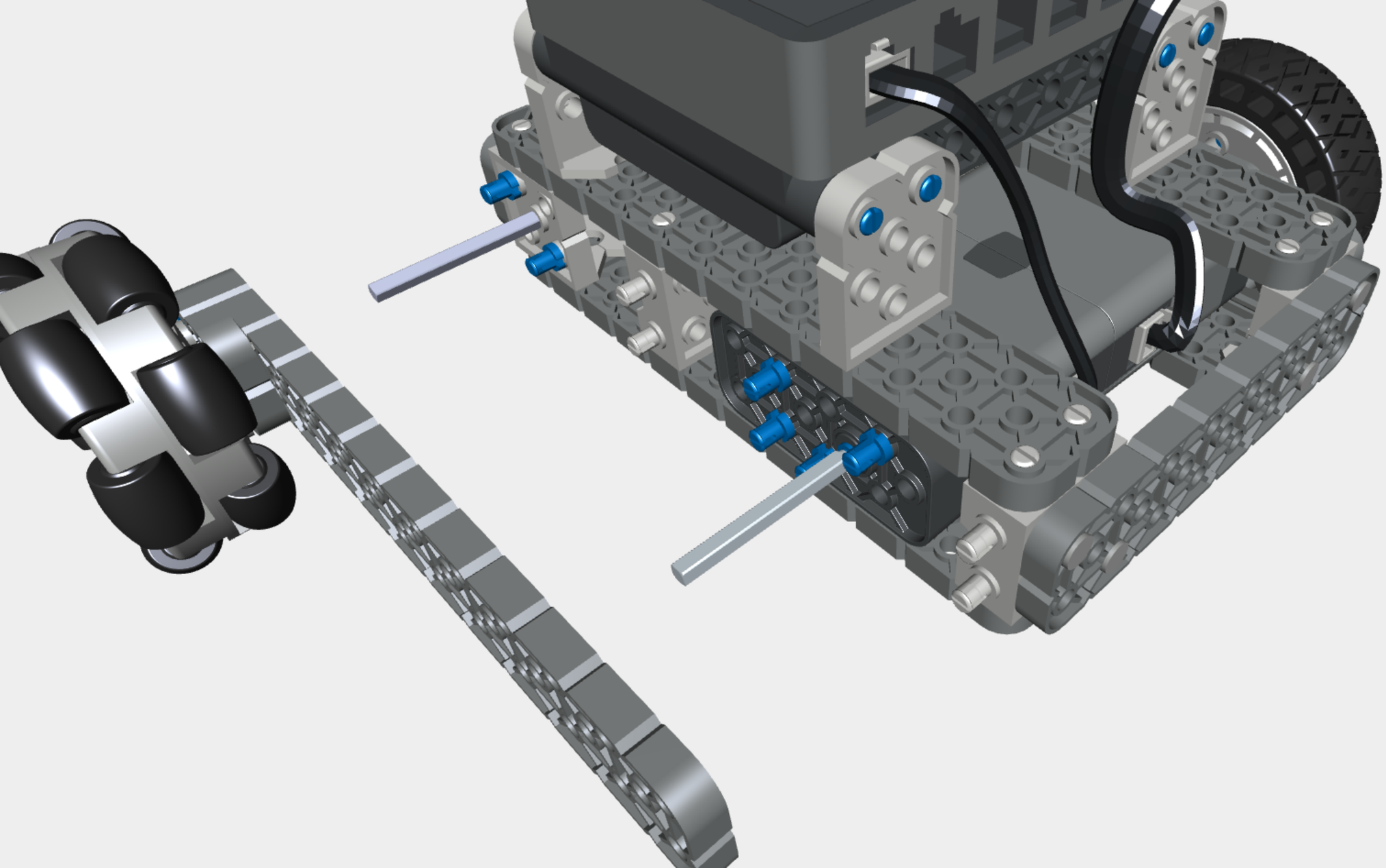

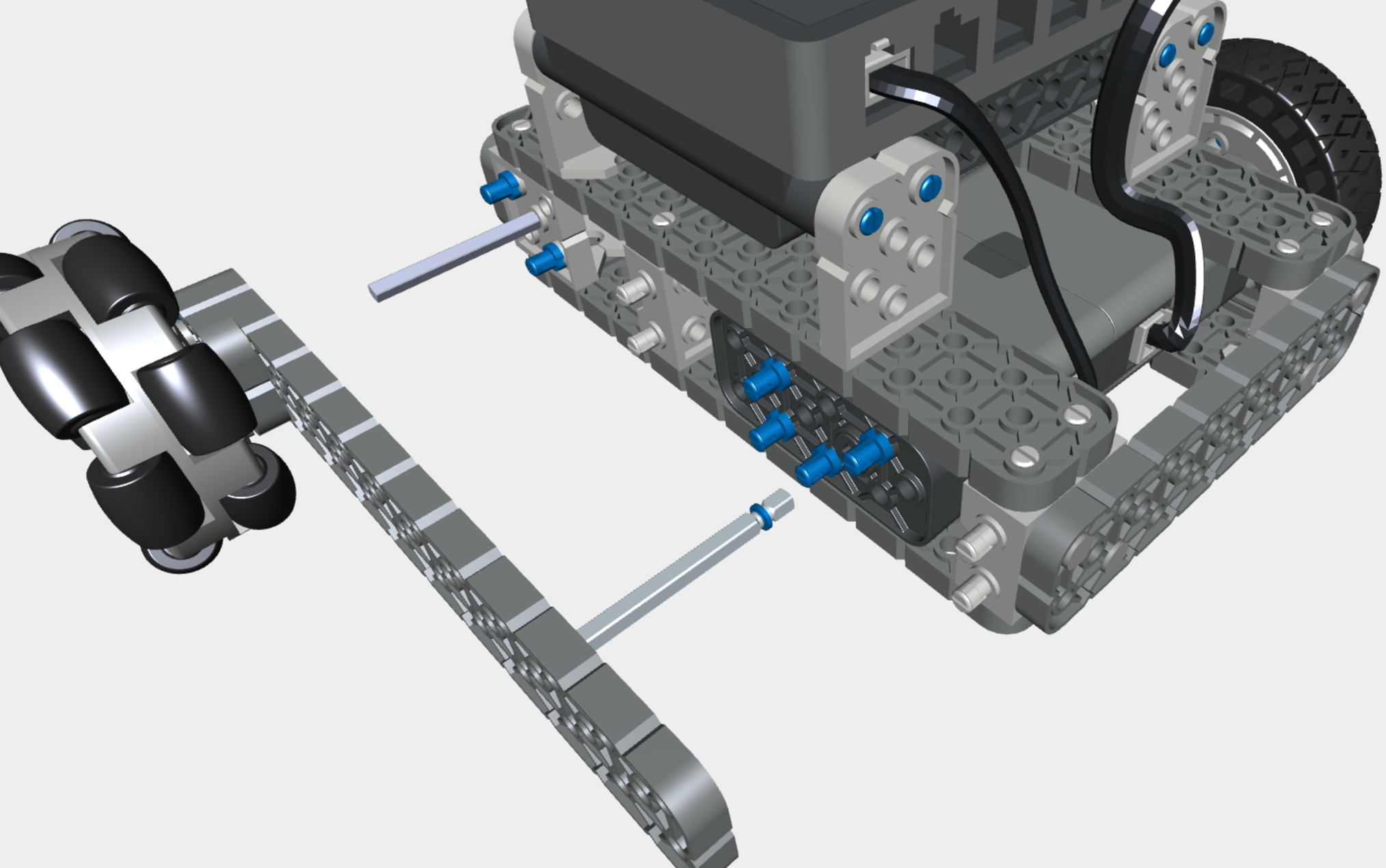

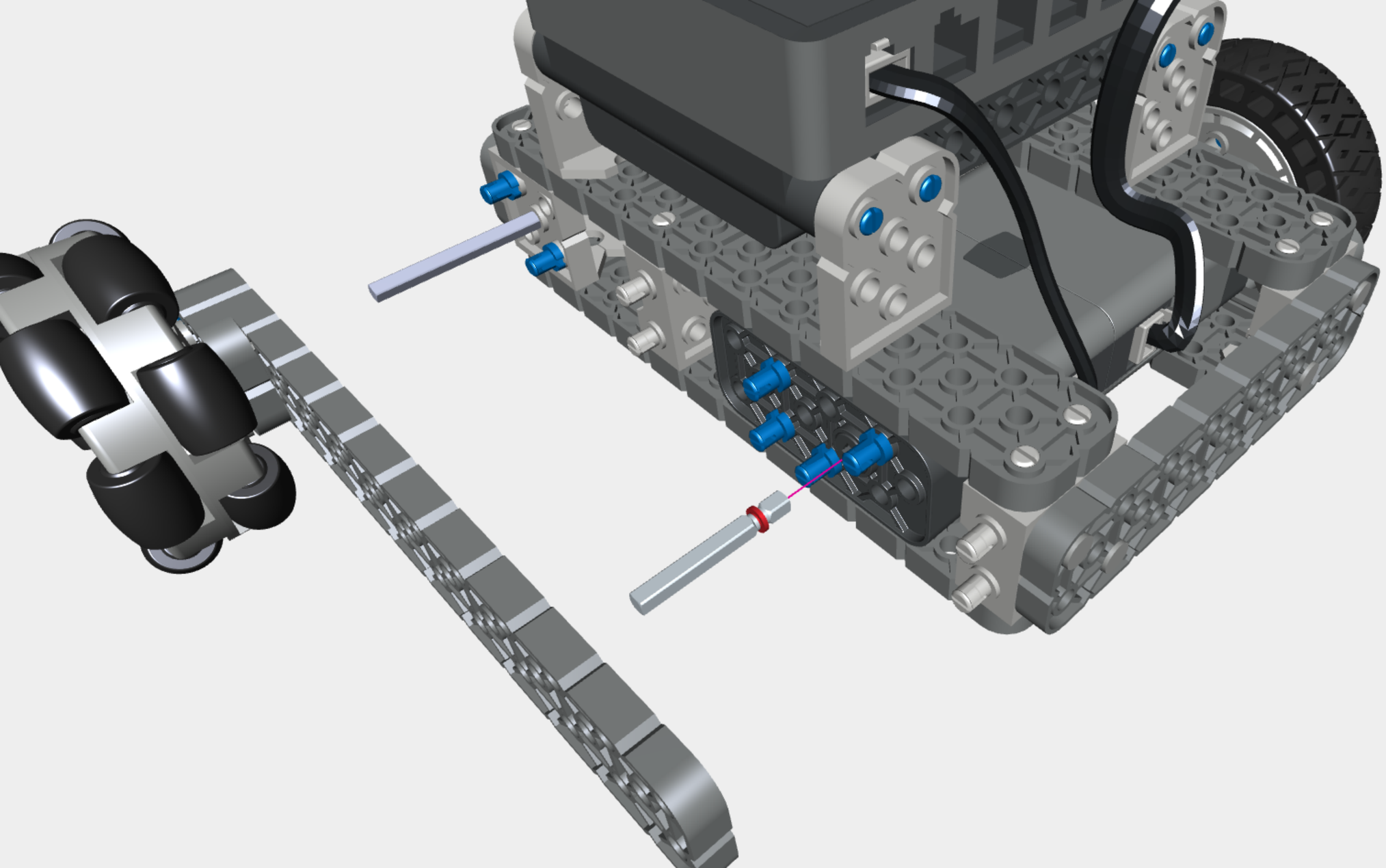

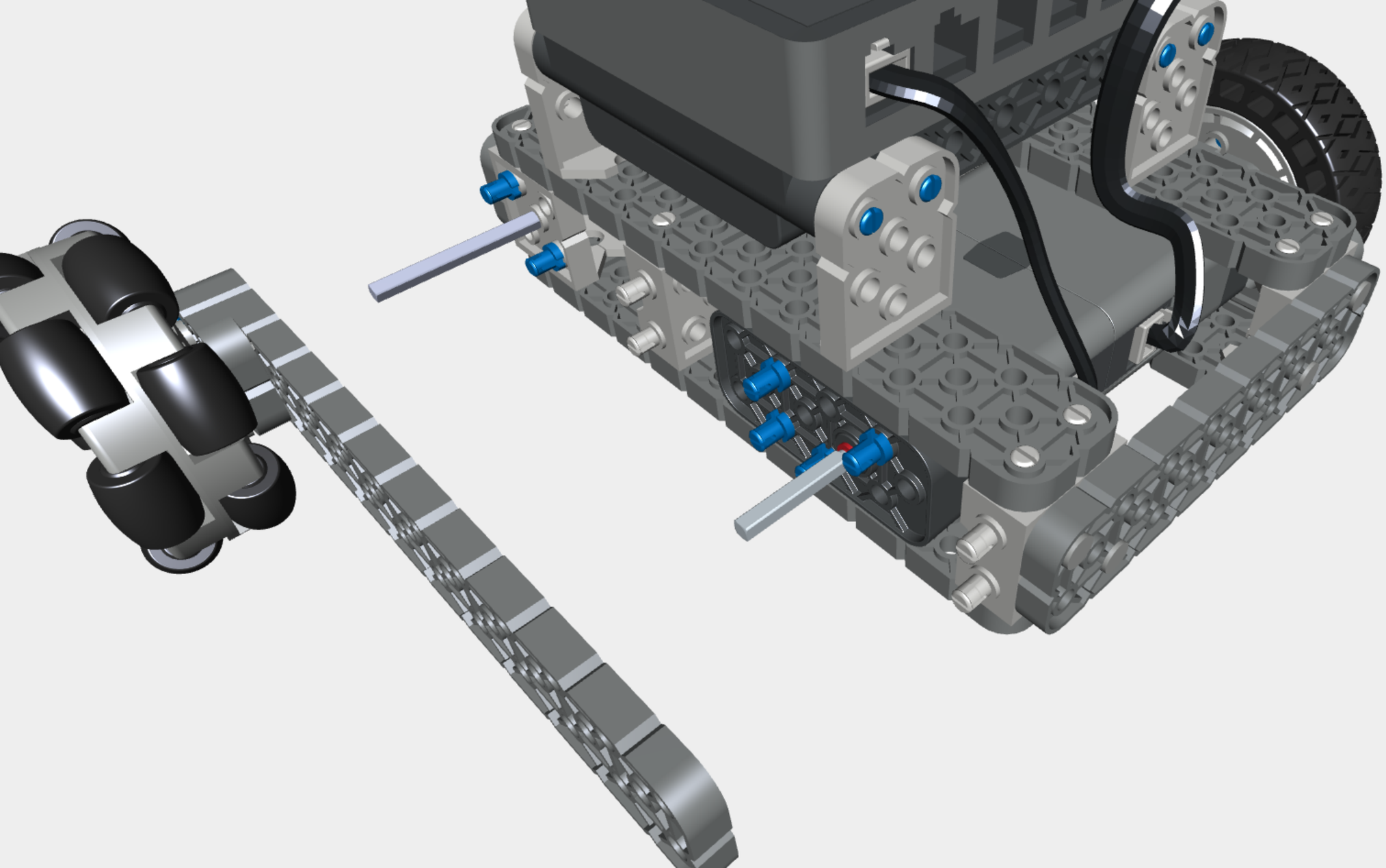

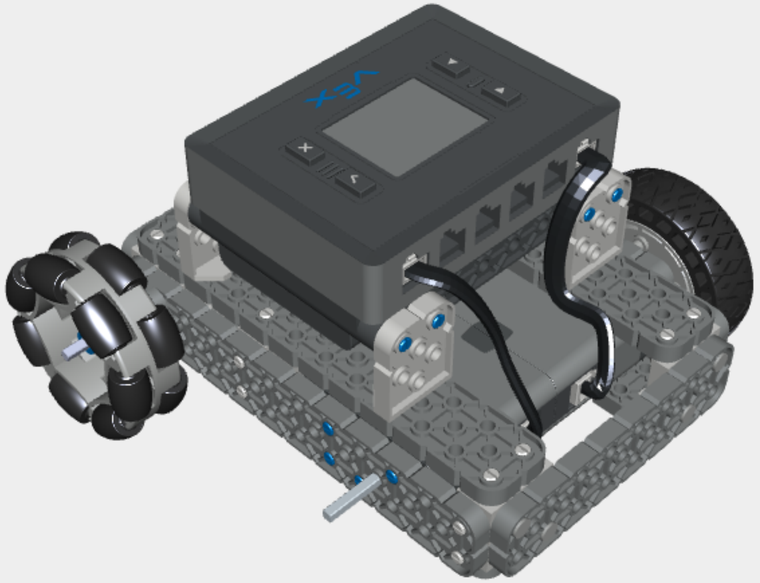
VEX

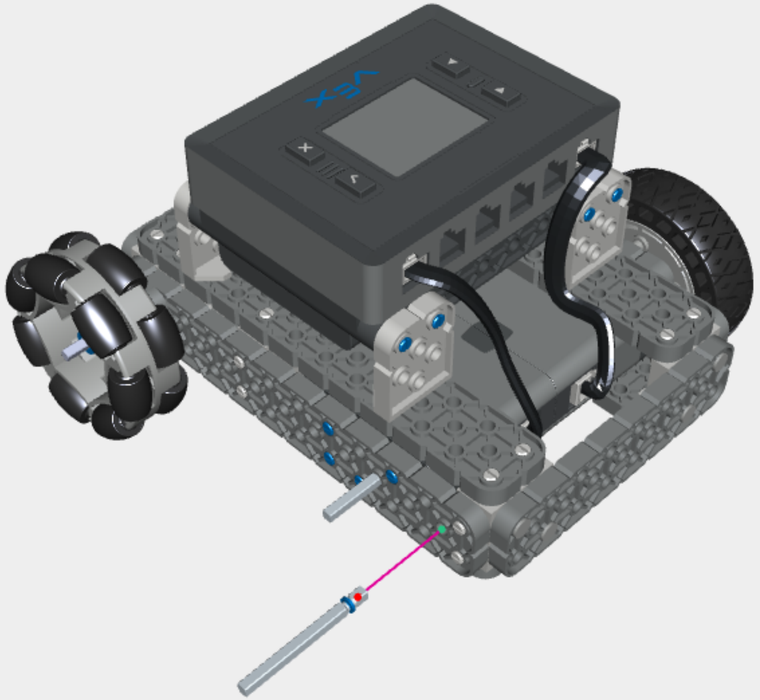

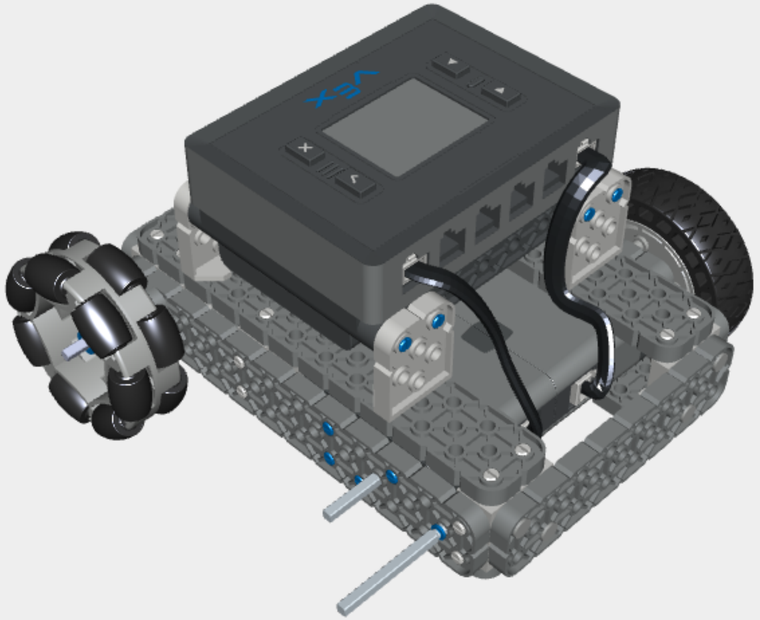

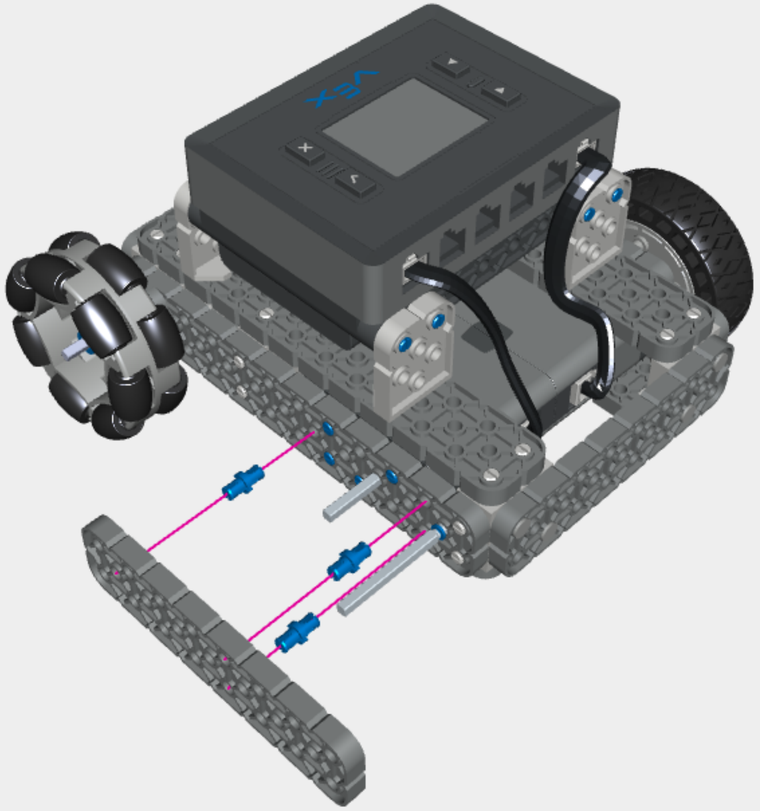
VEX

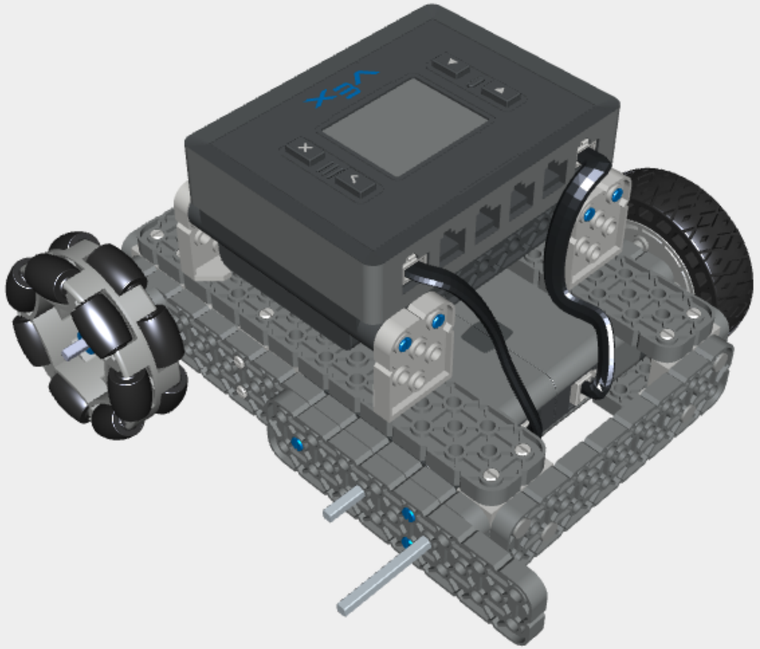
VEX

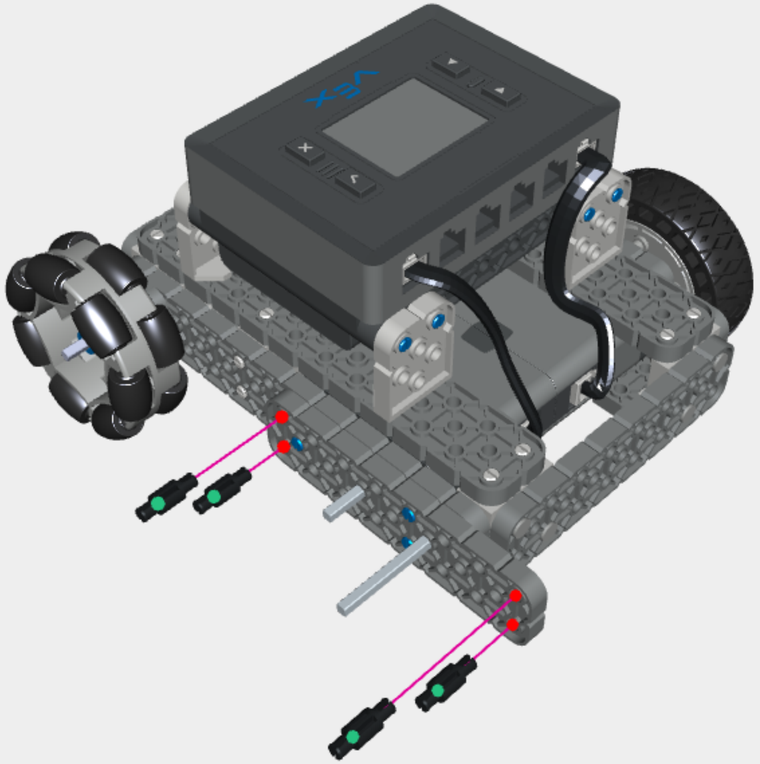

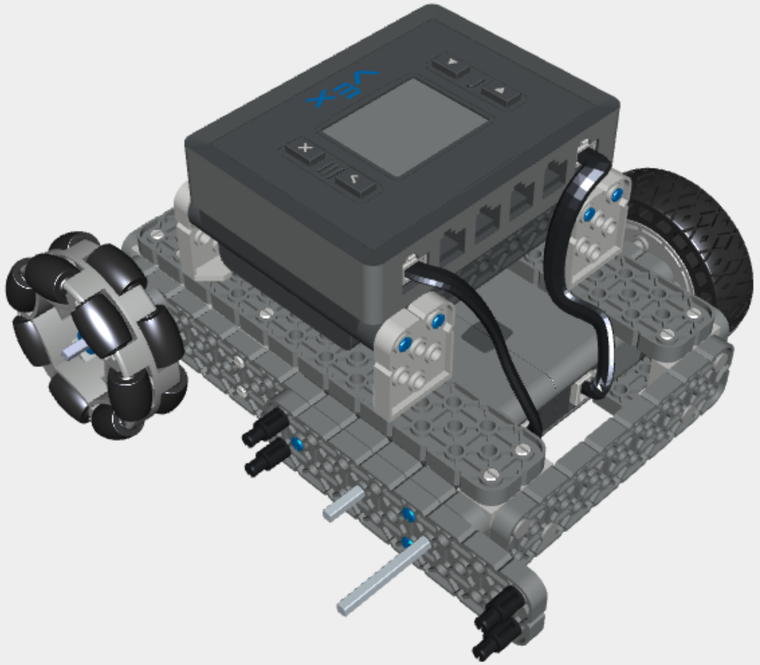

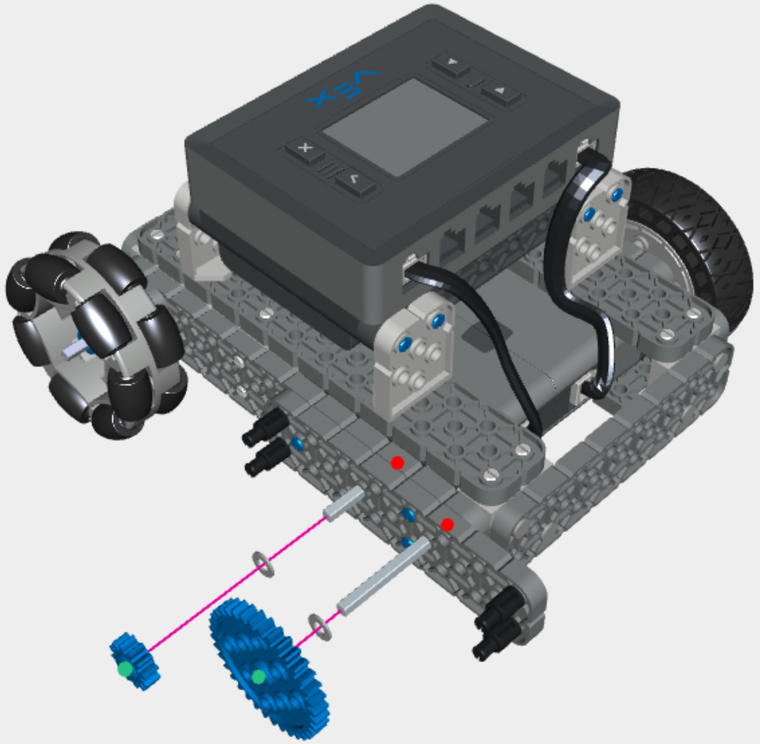

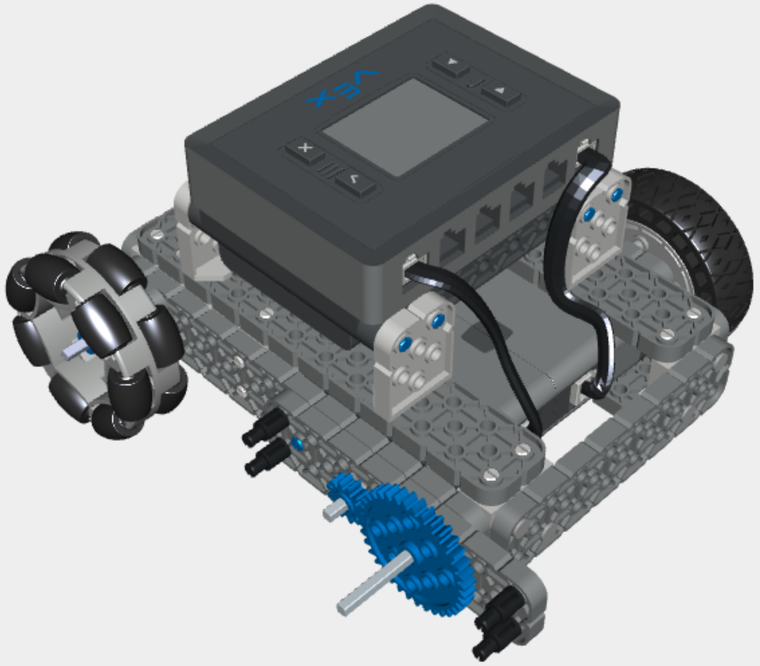

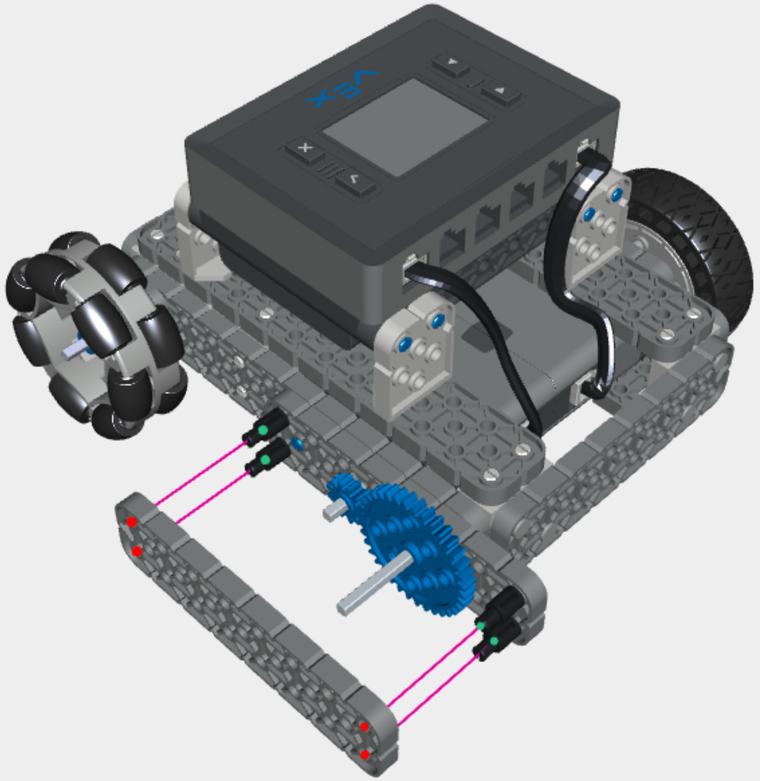

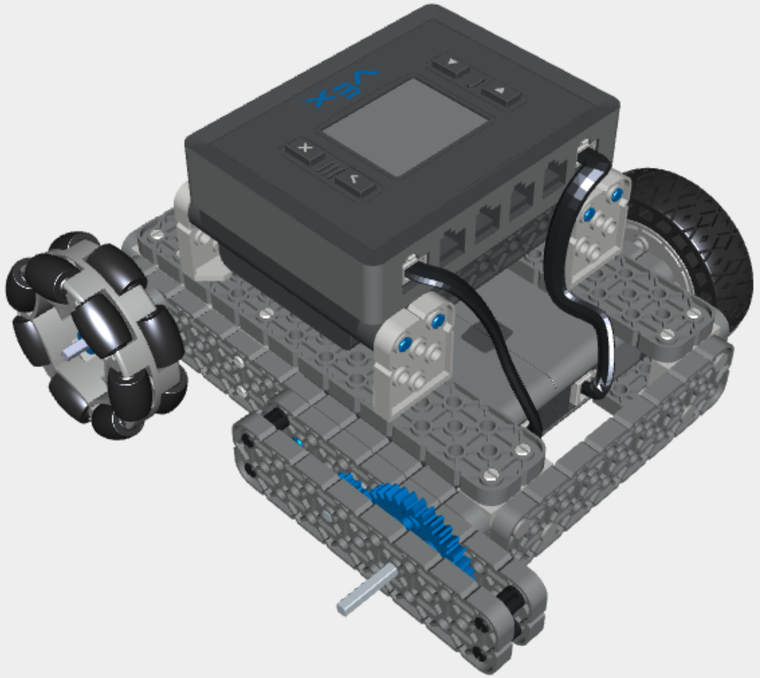

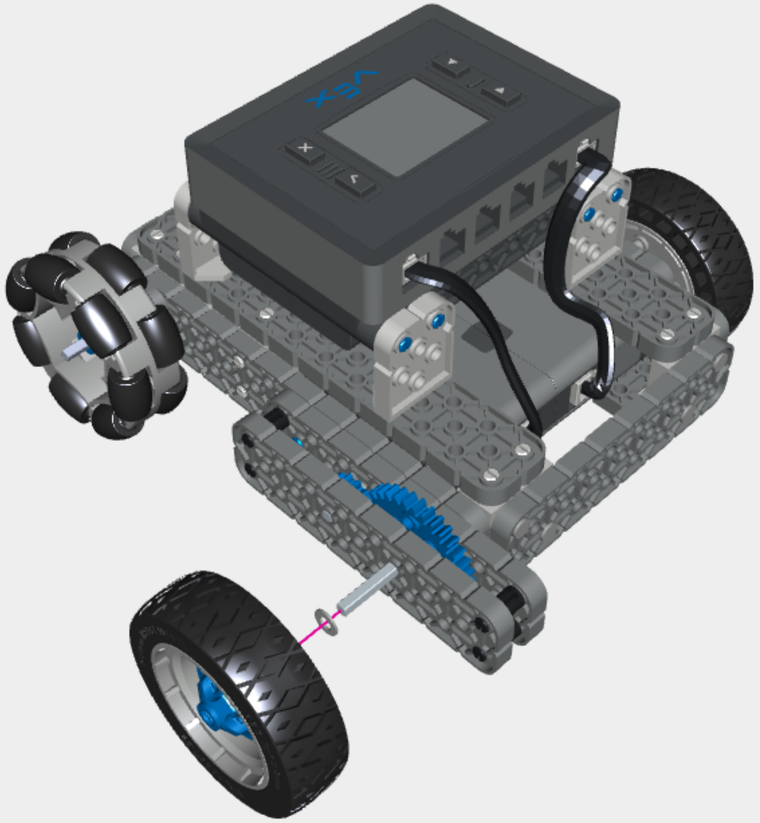

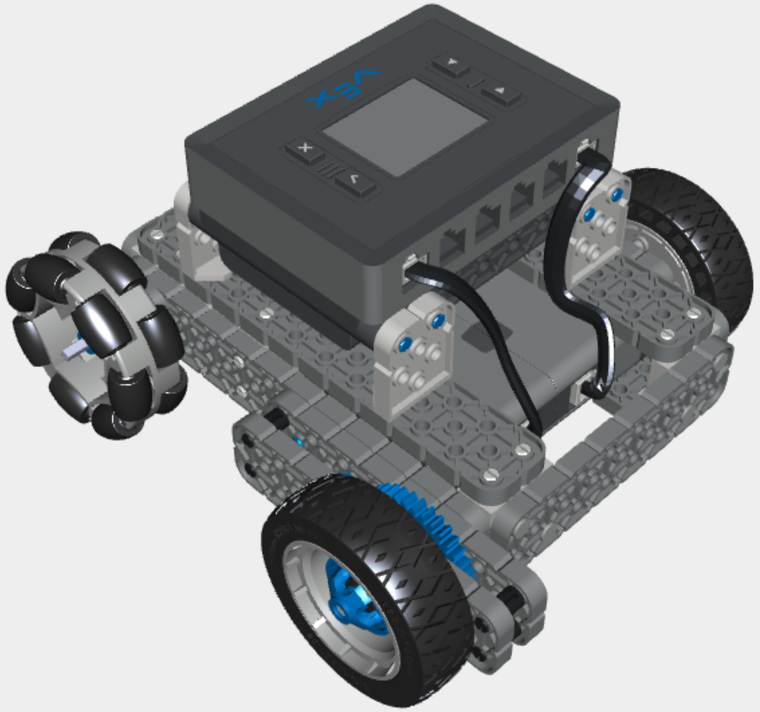
VEX